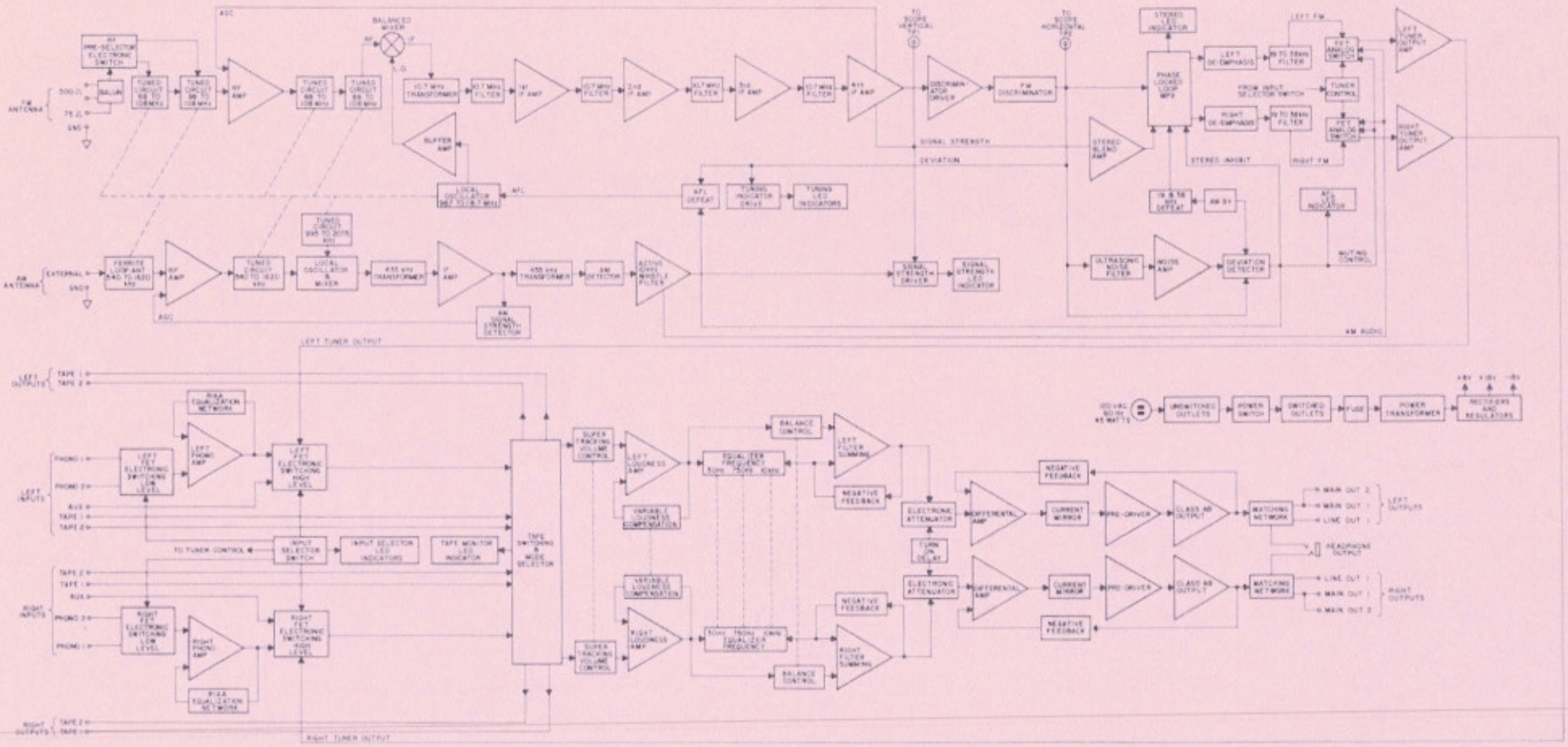

McINTOSH MX 117 AM/FM TUNER PREAMPLIFIER

Block Diagram

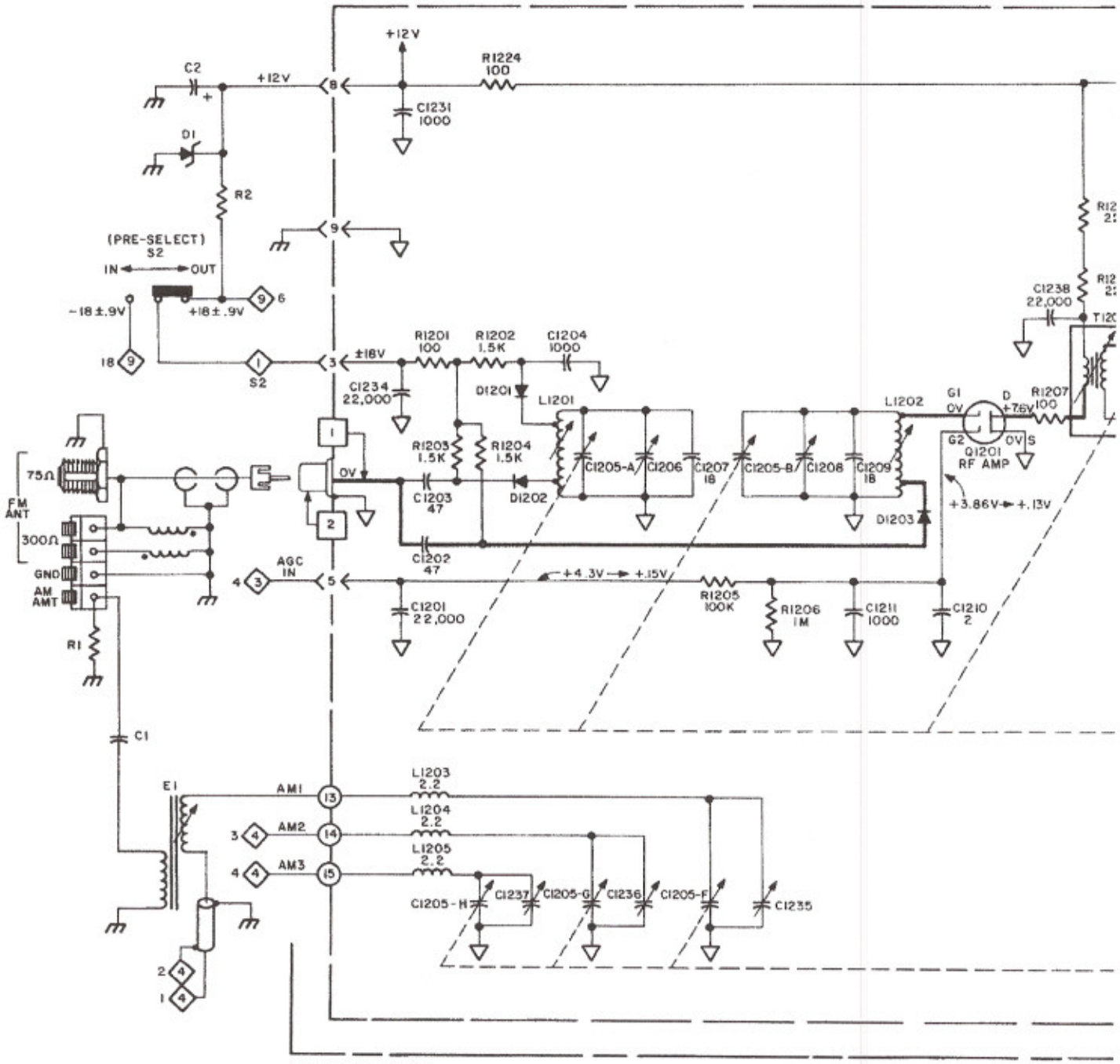

Schematic No. 156015A

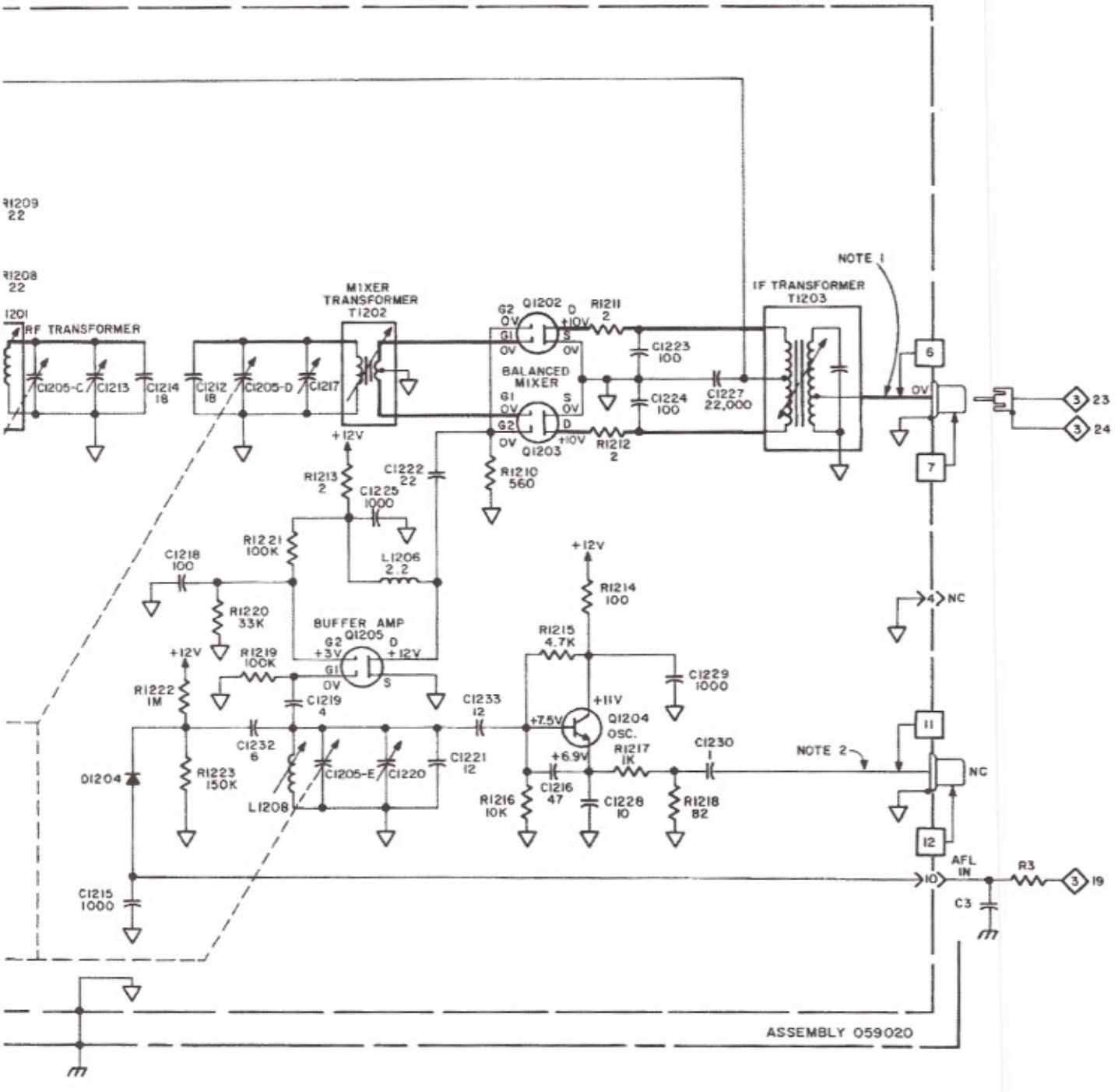
R1209
22
R1208
22
1201
RF TRANSFORMER
C1205-C
C1213
C1214
18
C1212
18
C1205-D
C1217
MIXER
TRANSFORMER
T1202
G2
0V
Q1202
D
+10V
G1
S
0V
0V
R1211
2
C1223
100
BALANCED
MIXER
G1
S
0V
0V
C1224
100
C1227
22,000
G2
D
0V
+10V
Q1203
R1212
2
IF TRANSFORMER
T1203
NOTE 1
6
0V
7
23
24
+12V
R1213
2
C1222
22
C1225
1000
R1210
560
R1221
100K
L1206
2.2
C1218
100
R1220
33K
+12V
R1214
100
4
NC
BUFFER AMP
Q1205
G2
+3V
D
+12V
G1
0V
S
R1215
4.7K
C1229
1000
+12V
R1219
100K
R1222
1M
C1219
4
C1233
12
+11V
+7.5V
Q1204
OSC.
C1232
6
C1221
12
+6.9V
R1217
1K
C1230
1
NOTE 2
11
NC
D1204
R1223
150K
C1205-E
C1220
L1208
R1216
10K
C1216
47
C1228
10
R1218
82
12
AFL
IN
R3
10
19
C3
C1215
1000
ASSEMBLY 059020

F ASSEMBLY

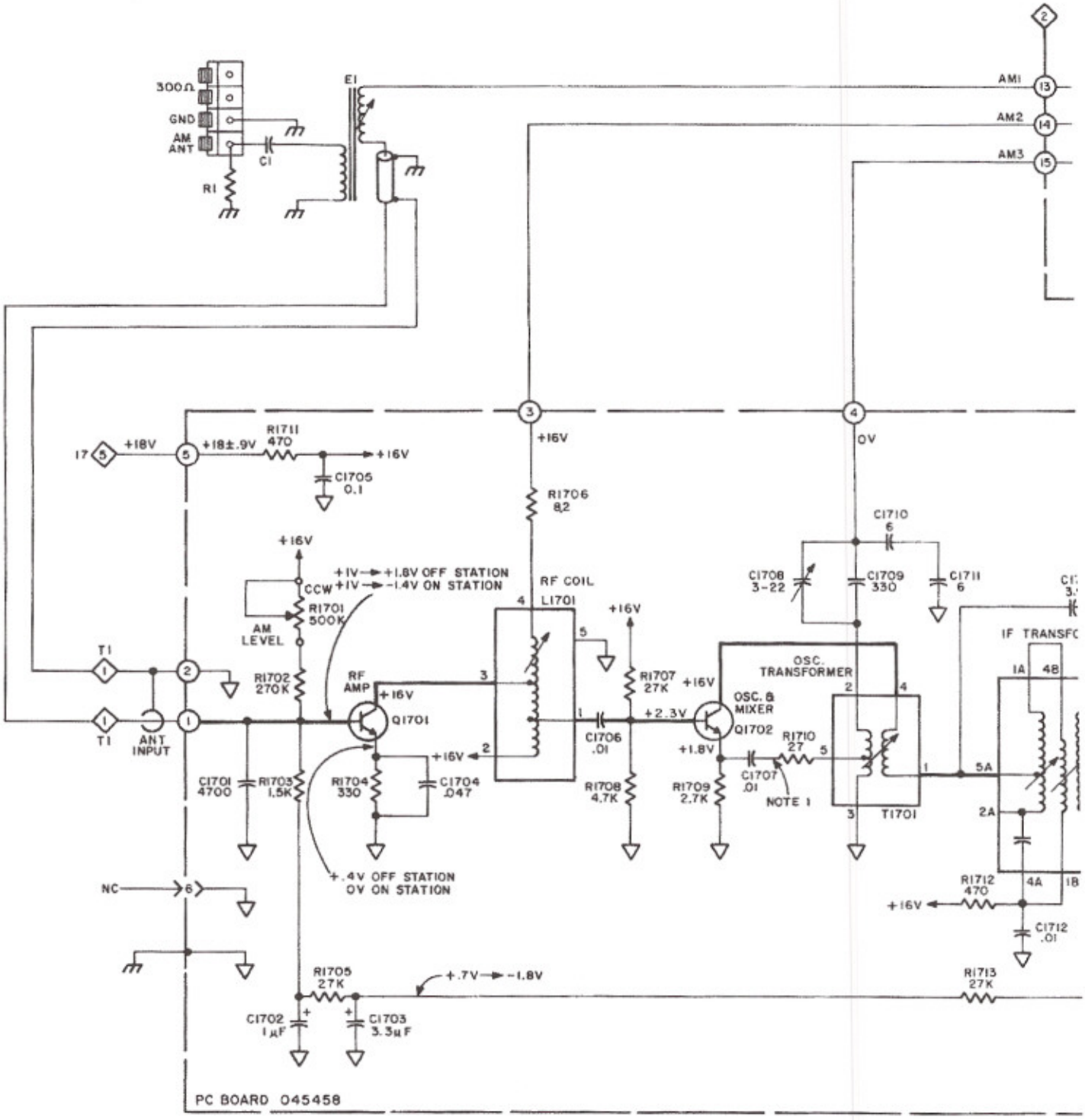

Section 4 AM / RF, AM / IF and AM DE

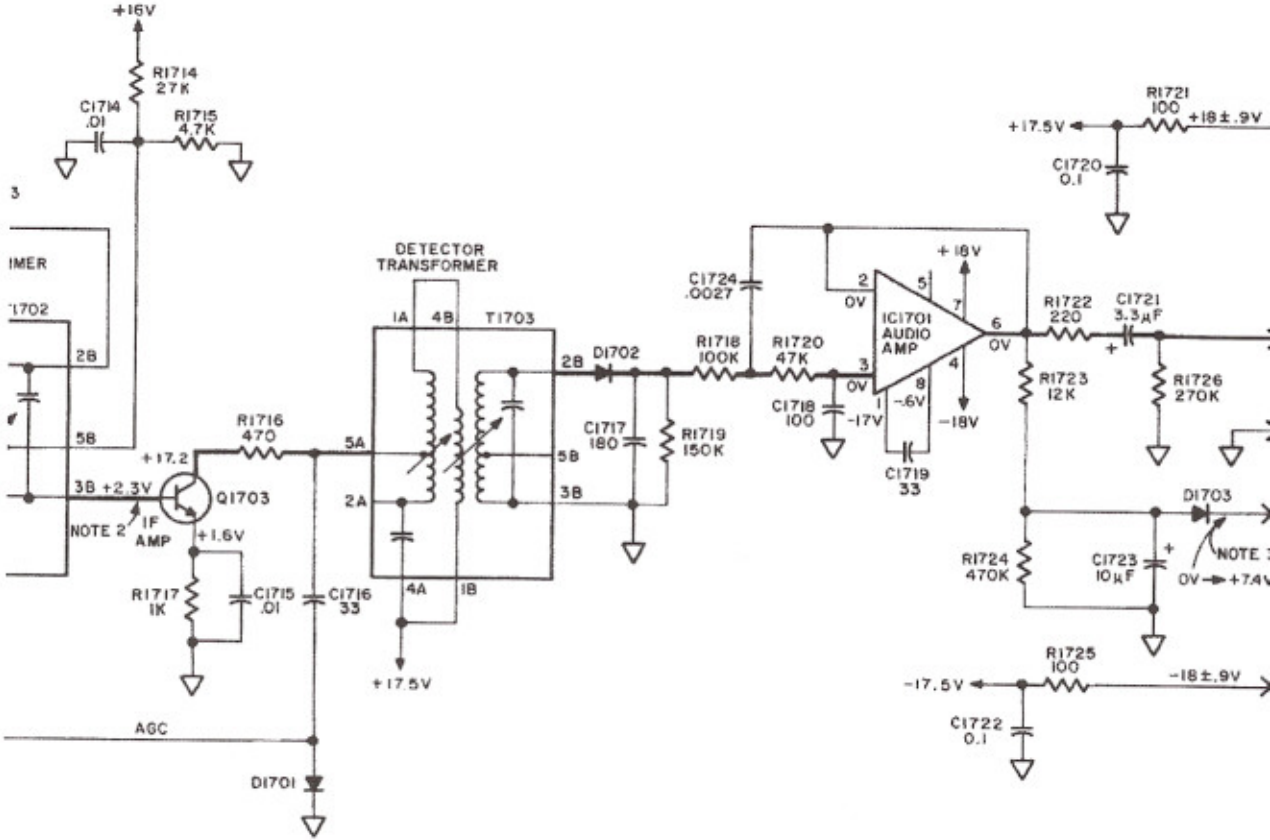
+16V
R1714
27K
C1714
.01
R1715
4.7K
3
IMER
T1702
2B
5B
3B +2.3V
NOTE 2
IF
AMP
+17.2
Q1703
+1.6V
R1716
470
R1717
1K
C1715
.01
C1716
33
AGC
D1701
DETECTOR
TRANSFORMER
1A
4B
T1703
5A
2A
4A
1B
+17.5V
2B
D1702
5B
3B
C1717
180
R1719
150K
C1724
.0027
R1718
100K
R1720
47K
C1718
100
-17V
0V
IC1701
AUDIO
AMP
+18V
-6V
-18V
C1719
33
R1721
100
+17.5V
+18±.9V
C1720
0.1
R1722
220
C1721
3.3μF
R1723
12K
R1726
270K
D1703
R1724
470K
C1723
10μF
NOTE 3
0V→+7.4V
R1725
100
-17.5V
-18±.9V
C1722
0.1

Part No. 039355

MX 117

AM / FM TUNER PREAMP

McIntosh

schematic information

SHEET 1 OF 2

The continuous improvement of its products is the policy of McIntosh Laboratory Incorporated, who reserve the right to improve design without notice. Because of the constant upgrading of McIntosh products' circuitry and components, the Company cannot insure, and does not warrant, the accuracy of the within schematic material, which is intended for information only.

McINTOSH LABORATORY INC. 2 CHAMBERS ST. BINGHAMTON, NY 13903

Printed in U.S.A.

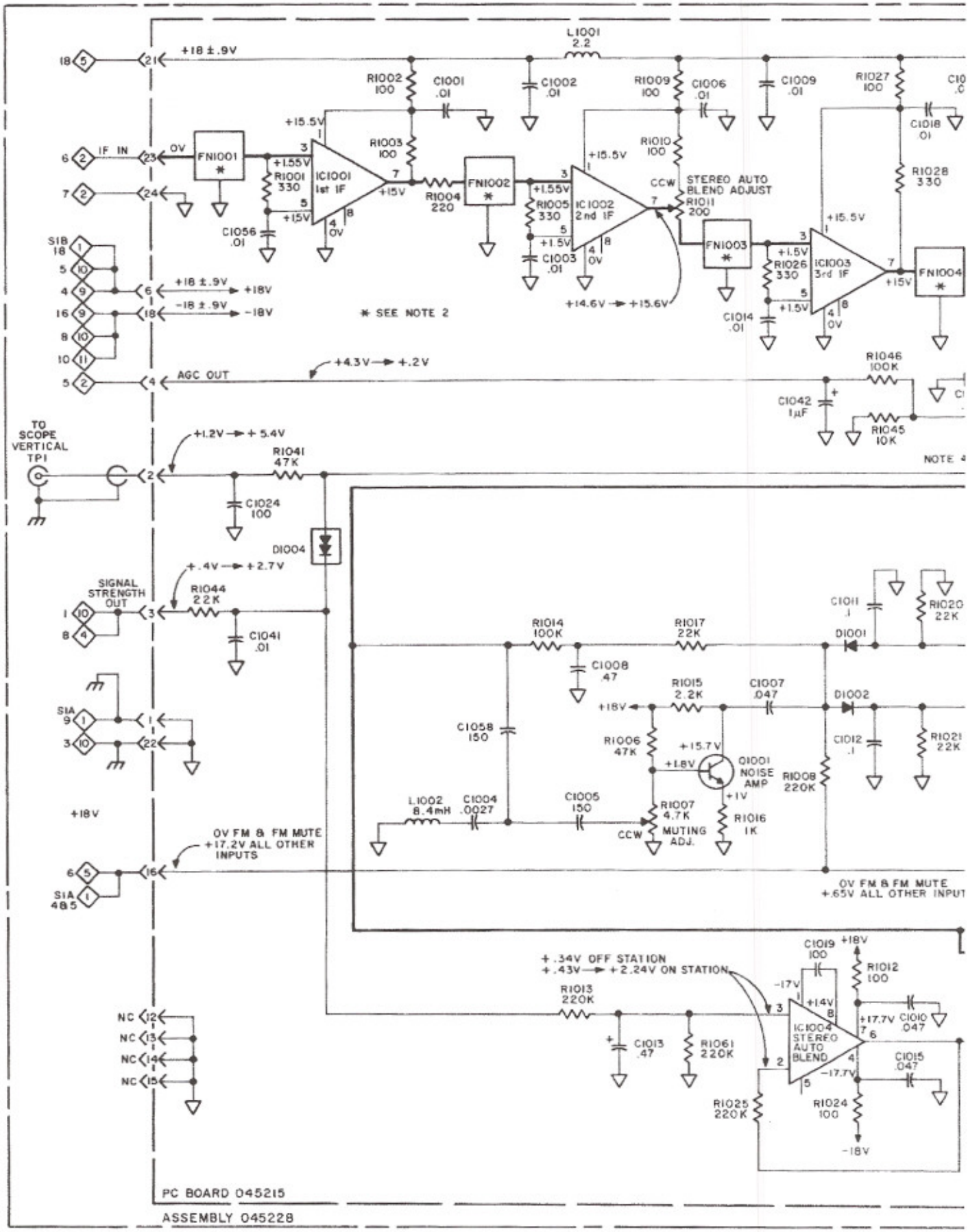
+18 ±.9V
L1001 2.2
R1002 100
C1001 .01
C1002 .01
R1009 100
C1006 .01
C1009 .01
R1027 100
C1018 .01
IF IN
0V
FN1001 *
+15.5V
R1001 330
IC1001 1st IF
+15V
R1003 100
R1004 220
FN1002 *
R1005 330
IC1002 2nd IF
R1010 100
CCW
STEREO AUTO BLEND ADJUST
R1011 200
FN1003 *
R1026 330
IC1003 3rd IF
R1028 330
FN1004 *
C1056 .01
C1003 .01
C1014 .01
+14.6V → +15.6V
* SEE NOTE 2
S1B
+18 ±.9V → +18V
-18 ±.9V → -18V
AGC OUT
+4.3V → +.2V
R1046 100K
C1042 1µF
R1045 10K
NOTE 4
TO SCOPE VERTICAL TP1
+1.2V → +5.4V
R1041 47K
C1024 100
D1004
+.4V → +2.7V
SIGNAL STRENGTH OUT
R1044 22K
C1041 .01
S1A
+18V
0V FM & FM MUTE +17.2V ALL OTHER INPUTS
S1A 4&5
R1014 100K
R1017 22K
C1008 .47
C1011 .1
R1020 22K
D1001
R1015 2.2K
C1007 .047
D1002
C1058 150
R1006 47K
+15.7V
Q1001 NOISE AMP
+1.8V
+1V
R1008 220K
C1012 .1
R1021 22K
L1002 8.4mH
C1004 .0027
C1005 150
R1007 4.7K MUTING ADJ.
R1016 1K
0V FM & FM MUTE +.65V ALL OTHER INPUT
+.34V OFF STATION
+.43V → +2.24V ON STATION
C1019 100
R1012 100
R1013 220K
IC1004 STEREO AUTO BLEND
+17.7V
C1010 .047
C1015 .047
C1013 .47
R1061 220K
R1025 220K
R1024 100
-18V
NC
PC BOARD 045215
ASSEMBLY 045228

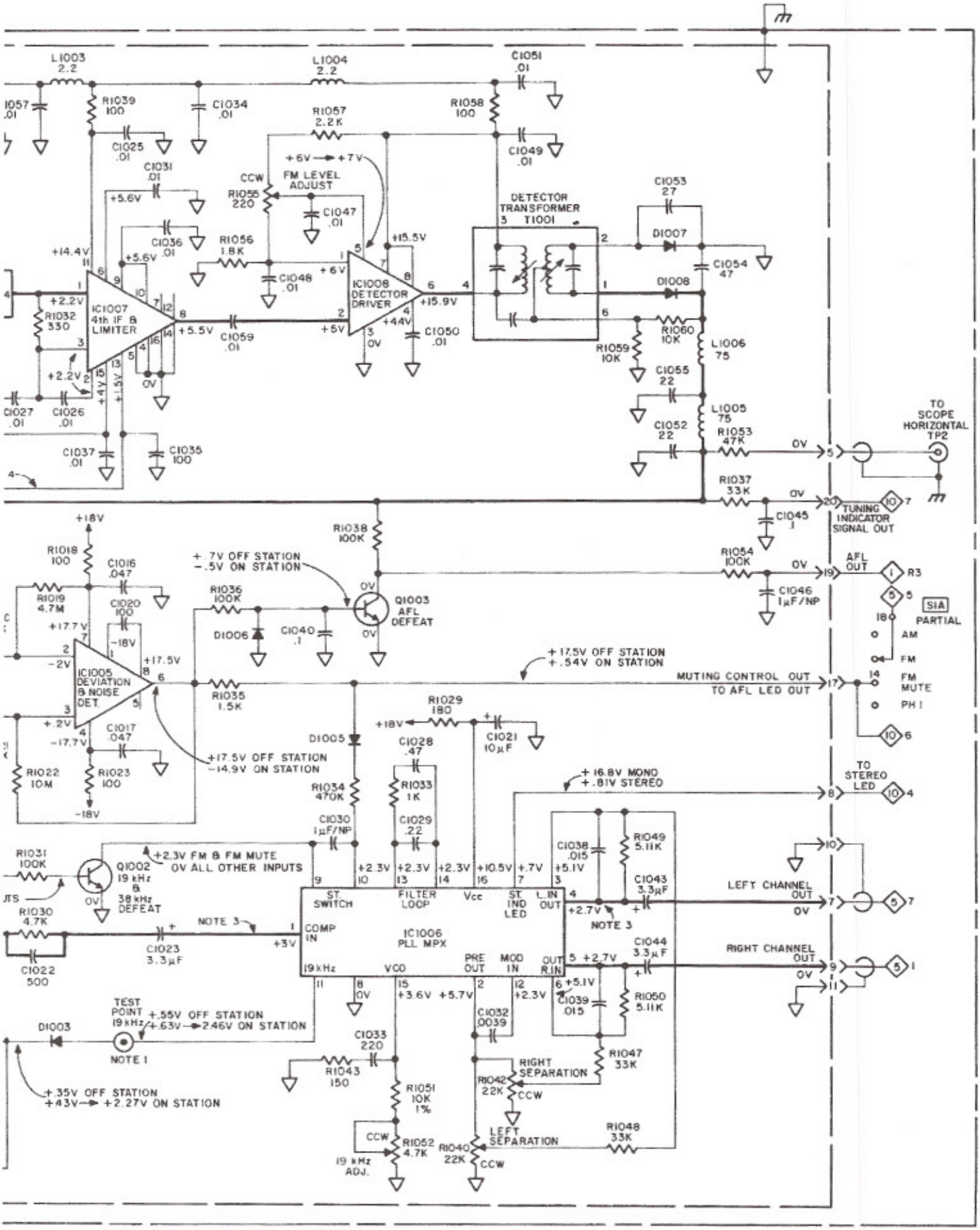

Schematic No. 156016

Section 3 FM / IF, FM DETECTOR, MP
and MUTING DRIVE ASSEM

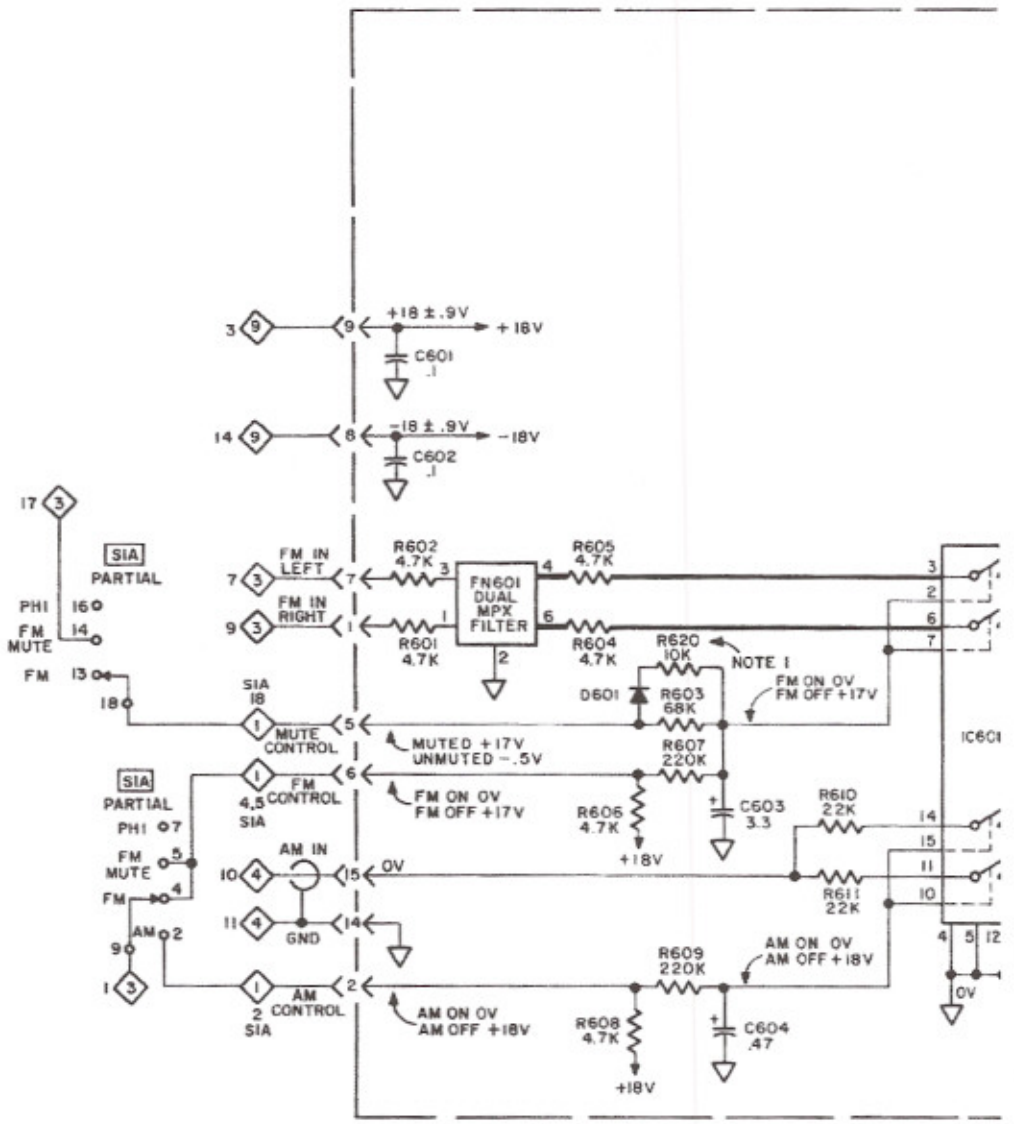

Schematic No. 156018A

Section 5 19-38 kHz FILTER, BUFFER AMP, MUTING CONTROL and AM / FM SWITCHING

PX, AFL,
MBLY

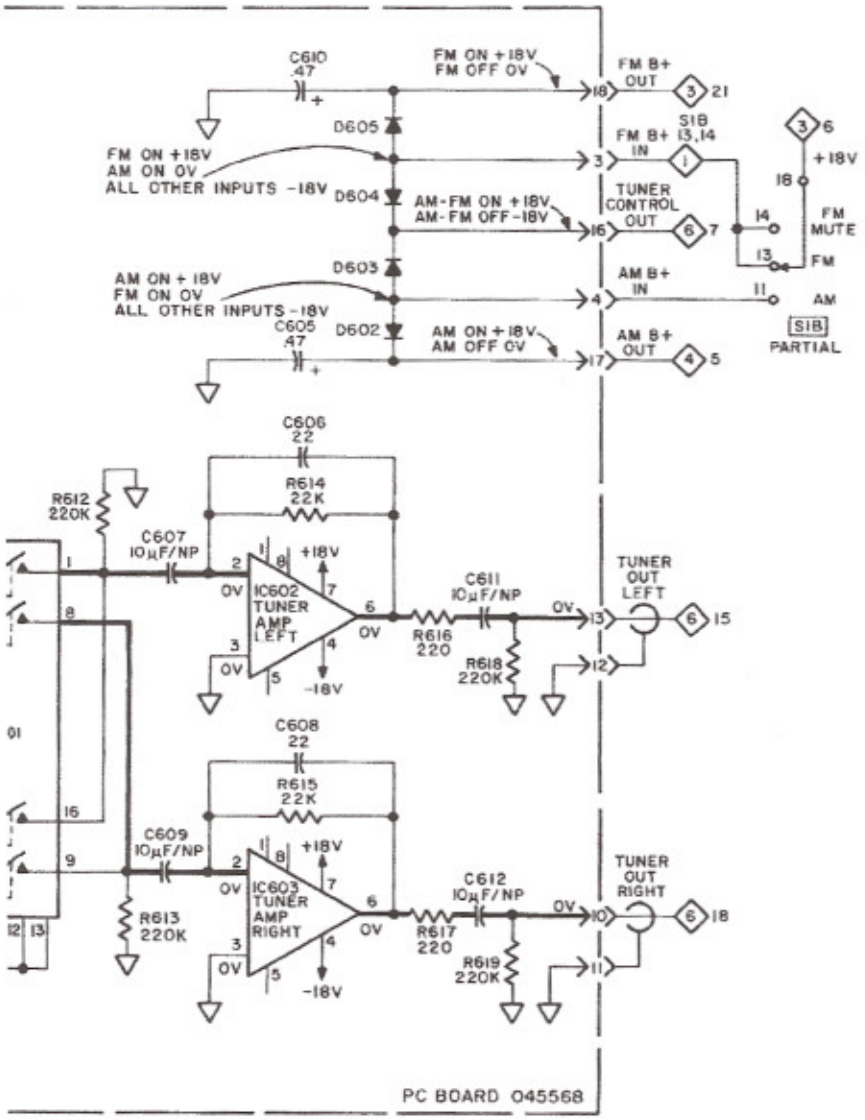
C610
.47
FM ON +18V
FM OFF 0V
FM B+
OUT
21
D605
FM B+
IN
S1B
13,14
+18V
FM ON +18V
AM ON 0V
ALL OTHER INPUTS -18V
D604
AM-FM ON +18V
AM-FM OFF -18V
TUNER
CONTROL
OUT
FM
MUTE
FM
AM ON + 18V
FM ON 0V
ALL OTHER INPUTS -18V
D603
AM B+
IN
AM
S1B
PARTIAL
C605
.47
D602
AM ON +18V
AM OFF 0V
AM B+
OUT
C606
22
R614
22K
R612
220K
C607
10μF/NP
+18V
IC602
TUNER
AMP
LEFT
-18V
C611
10μF/NP
R616
220
R618
220K
TUNER
OUT
LEFT
C608
22
R615
22K
C609
10μF/NP
IC603
TUNER
AMP
RIGHT
R613
220K
C612
10μF/NP
R617
220
R619
220K
TUNER
OUT
RIGHT
PC BOARD 045568

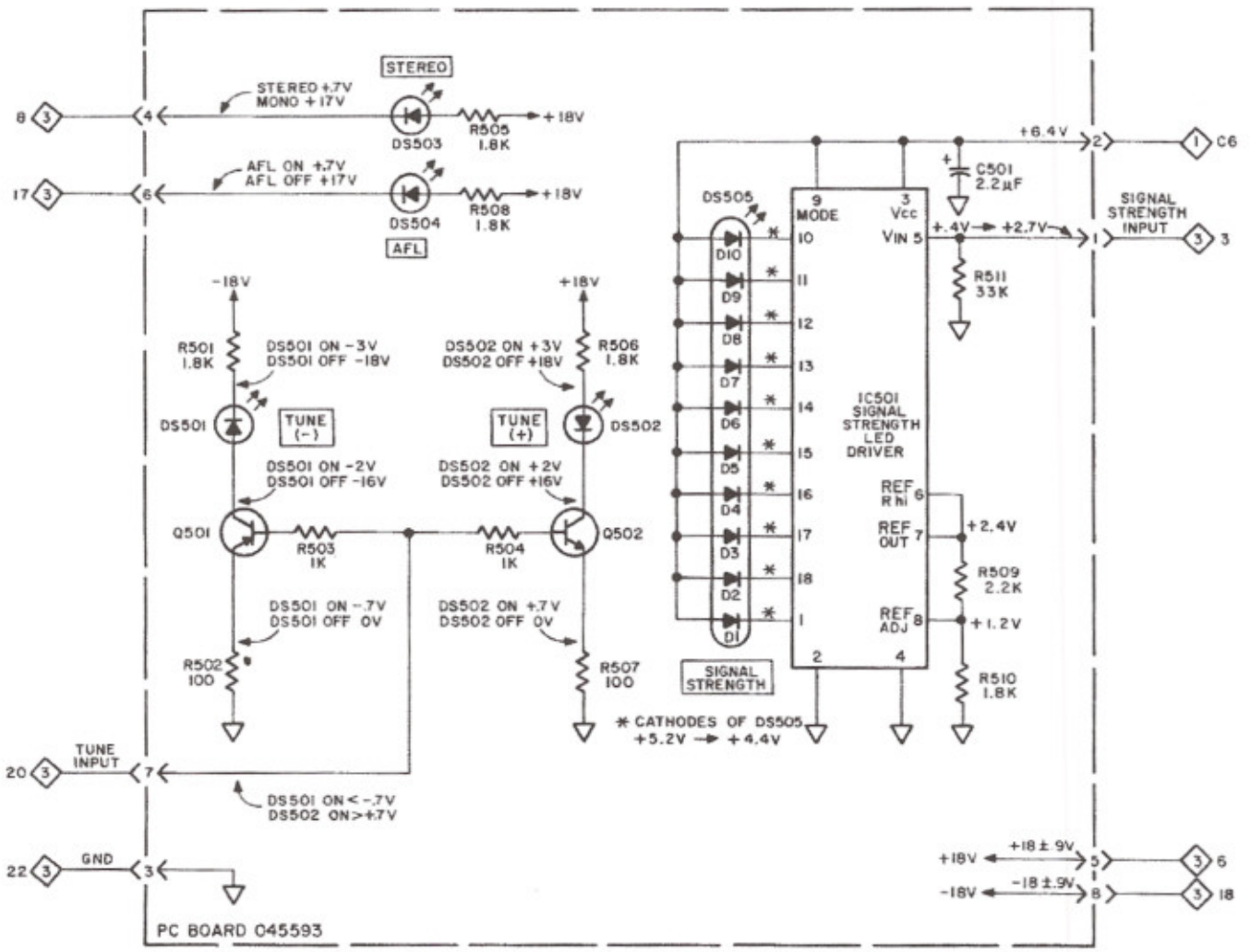

Schematic No. 156023A

Section 10 SIGNAL / TUNING DISPLAY

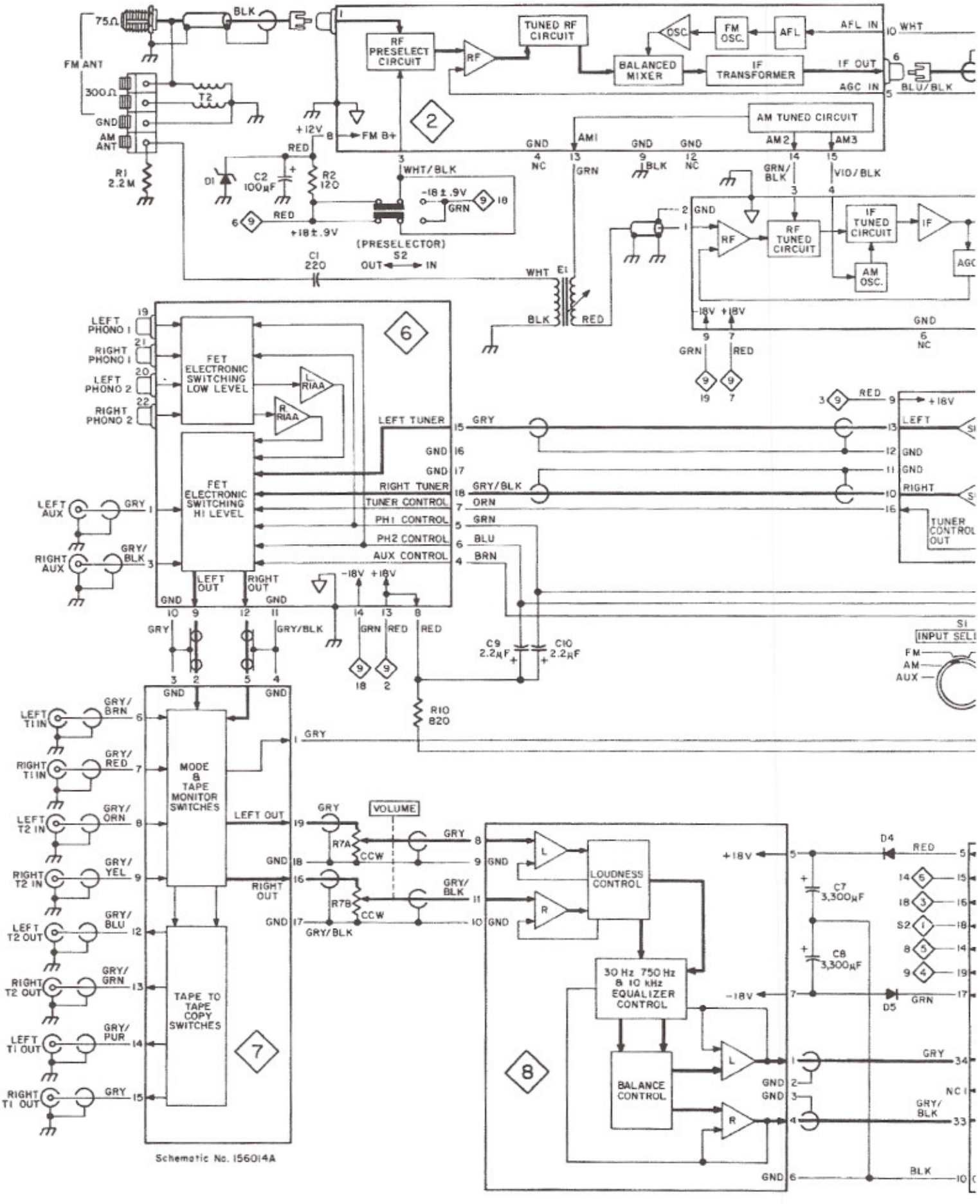

Schematic No. 156014A

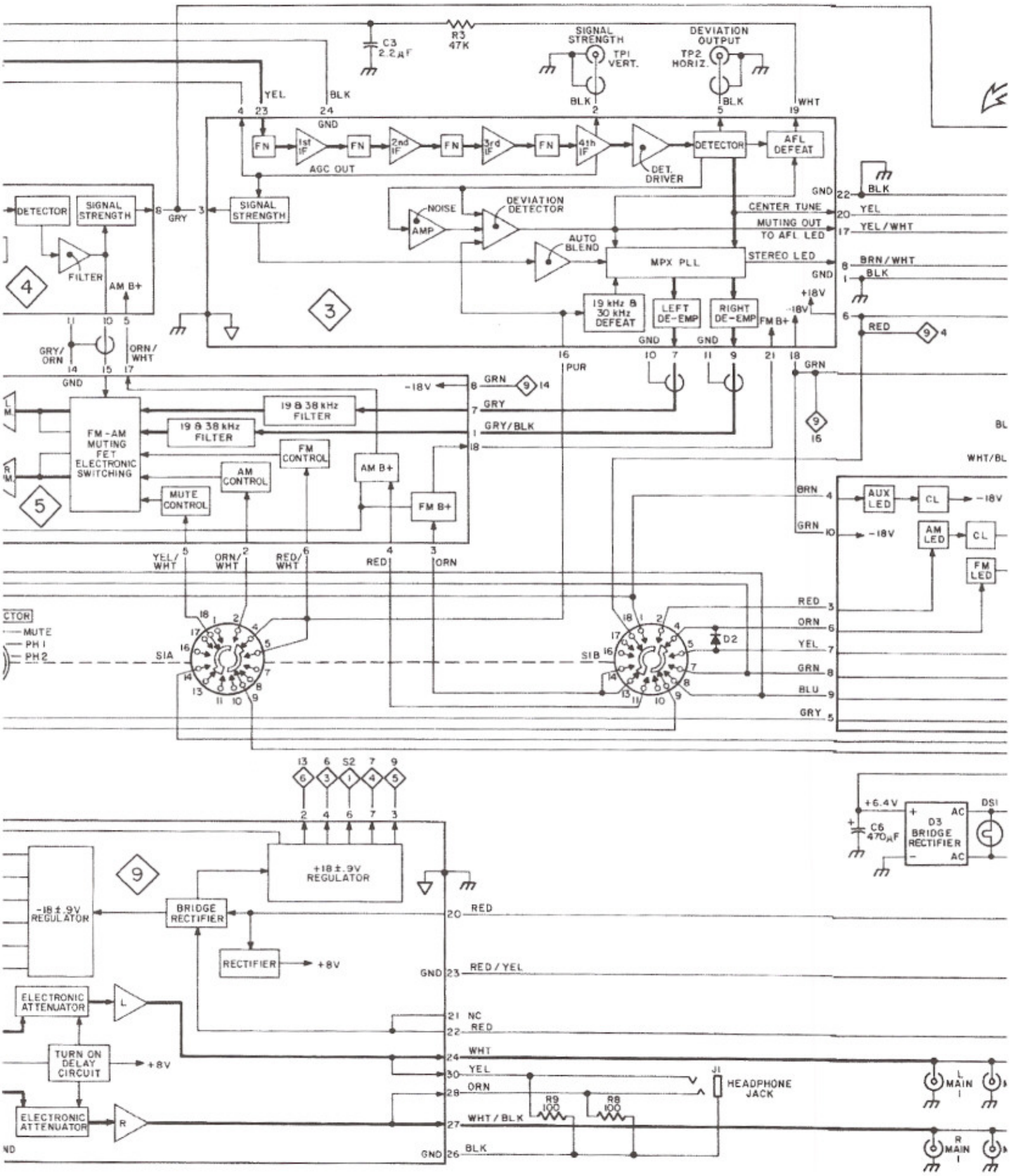
C3 2.2µF
R3 47K
SIGNAL STRENGTH
TP1 VERT.
DEVIATION OUTPUT
TP2 HORIZ.
BLK
YEL
BLK
GND
WHT
FN
1st IF
2nd IF
3rd IF
4th IF
AGC OUT
DETECTOR
AFL DEFEAT
DET. DRIVER
DETECTOR
SIGNAL STRENGTH
FILTER
AM B+
GRY
SIGNAL STRENGTH
NOISE
AMP
DEVIATION DETECTOR
AUTO BLEND
MPX PLL
19 kHz & 30 kHz DEFEAT
LEFT DE-EMP
RIGHT DE-EMP
FM B+
GND
CENTER TUNE
MUTING OUT TO AFL LED
STEREO LED
BRN/WHT
+18V
-18V
RED
GRY/ ORN
ORN/ WHT
PUR
GRN
-18V
19 & 38 kHz FILTER
19 & 38 kHz FILTER
FM-AM MUTING FET ELECTRONIC SWITCHING
FM CONTROL
AM CONTROL
MUTE CONTROL
AM B+
FM B+
GRY
GRY/BLK
WHT/BL
BRN
GRN
AUX LED
CL
AM LED
FM LED
YEL/ WHT
ORN/ WHT
RED/ WHT
RED
ORN
MUTE
PH1
PH2
S1A
S1B
D2
RED
ORN
YEL
GRN
BLU
GRY
+6.4V
C6 470µF
D3 BRIDGE RECTIFIER
AC
DS1
+18±.9V REGULATOR
-18±.9V REGULATOR
BRIDGE RECTIFIER
RECTIFIER
+8V
ELECTRONIC ATTENUATOR
TURN ON DELAY CIRCUIT
ELECTRONIC ATTENUATOR
L
R
RED
RED/YEL
NC
RED
WHT
YEL
ORN
WHT/BLK
BLK
J1
HEADPHONE JACK
R9 100
R8 100
L MAIN
R MAIN

Section 1 INTERCONNECTION DIAGRAM

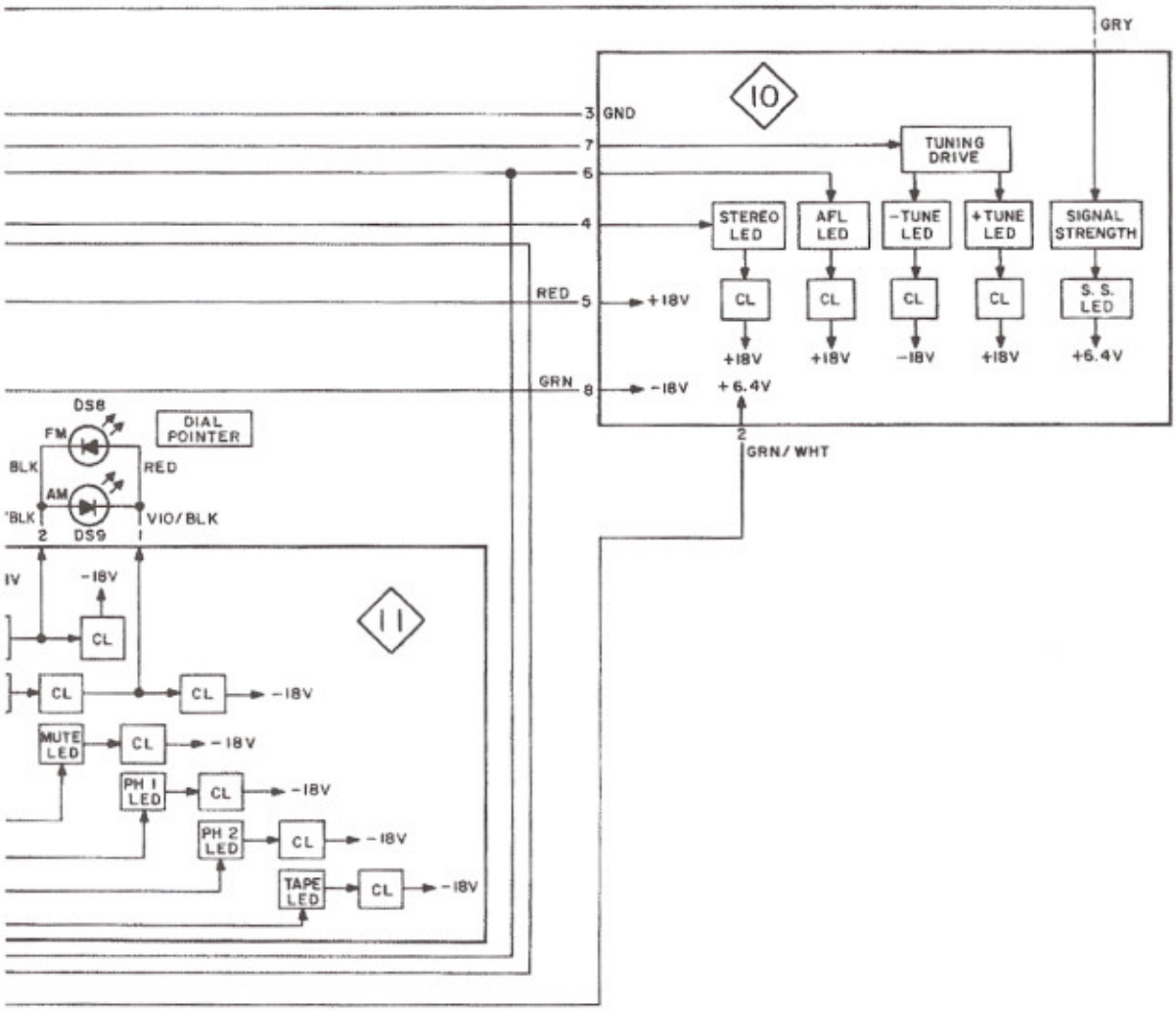

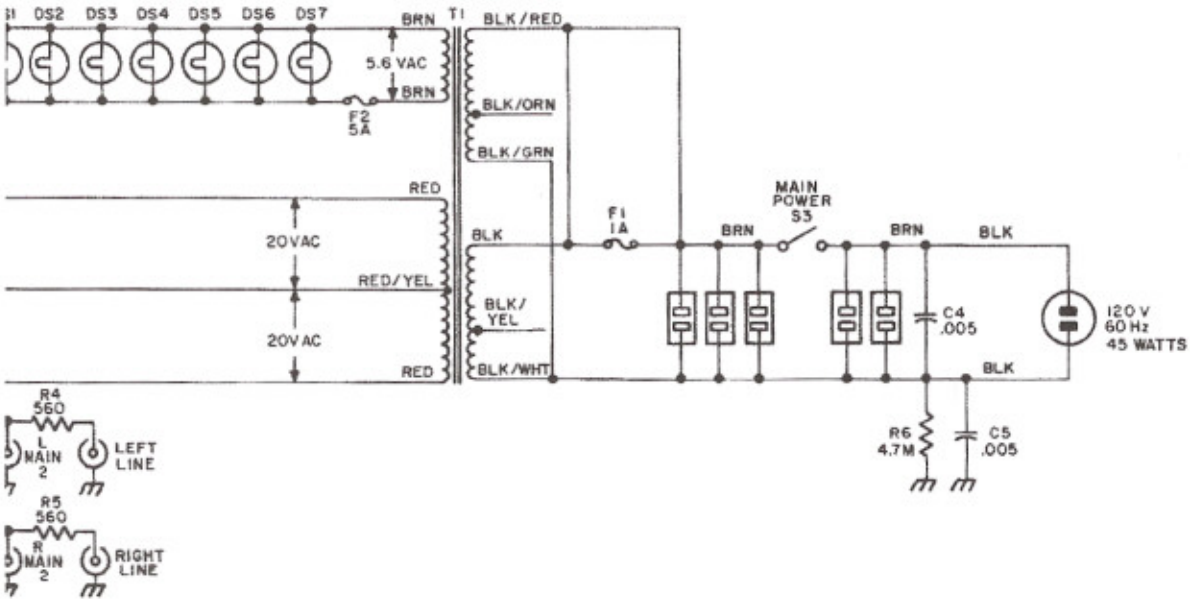

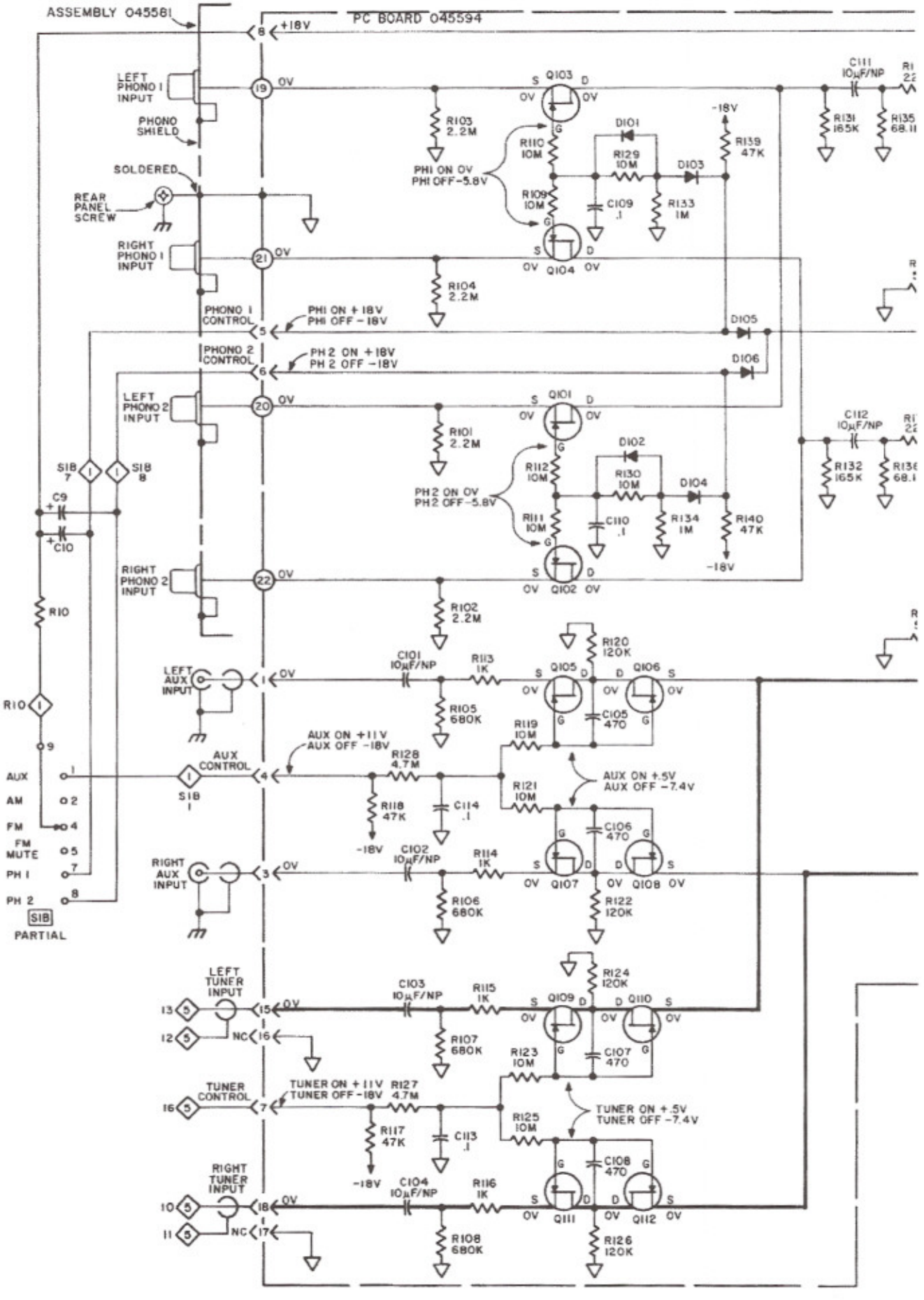
ASSEMBLY 045581
PC BOARD 045594
+18V
LEFT PHONO I INPUT
PHONO SHIELD
SOLDERED
REAR PANEL SCREW
RIGHT PHONO I INPUT
PHONO I CONTROL
PHI ON +18V
PHI OFF -18V
PHONO 2 CONTROL
PH2 ON +18V
PH2 OFF -18V
LEFT PHONO 2 INPUT
RIGHT PHONO 2 INPUT
Q103
Q104
Q101
Q102
R103 2.2M
R104 2.2M
R101 2.2M
R102 2.2M
R110 10M
R109 10M
R112 10M
R111 10M
PHI ON 0V
PHI OFF -5.8V
PH2 ON 0V
PH2 OFF -5.8V
D101
D102
D103
D104
D105
D106
R129 10M
R130 10M
R133 1M
R134 1M
R139 47K
R140 47K
C109 .1
C110 .1
-18V
C111 10μF/NP
C112 10μF/NP
R131 165K
R132 165K
R135 68.1
R136 68.1
S18 7
S18 8
C9
C10
R10
LEFT AUX INPUT
RIGHT AUX INPUT
C101 10μF/NP
C102 10μF/NP
R113 1K
R114 1K
R105 680K
R106 680K
Q105
Q106
Q107
Q108
R120 120K
R122 120K
C105 470
C106 470
R119 10M
R121 10M
AUX ON +11V
AUX OFF -18V
AUX CONTROL
R128 4.7M
R118 47K
C114 .1
AUX ON +.5V
AUX OFF -7.4V
AUX
AM
FM
FM MUTE
PH I
PH 2
S18 PARTIAL
LEFT TUNER INPUT
RIGHT TUNER INPUT
C103 10μF/NP
C104 10μF/NP
R115 1K
R116 1K
R107 680K
R108 680K
Q109
Q110
Q111
Q112
R124 120K
R126 120K
C107 470
C108 470
R123 10M
R125 10M
TUNER CONTROL
TUNER ON +11V
TUNER OFF -18V
R127 4.7M
R117 47K
C113 .1
TUNER ON +.5V
TUNER OFF -7.4V
NC

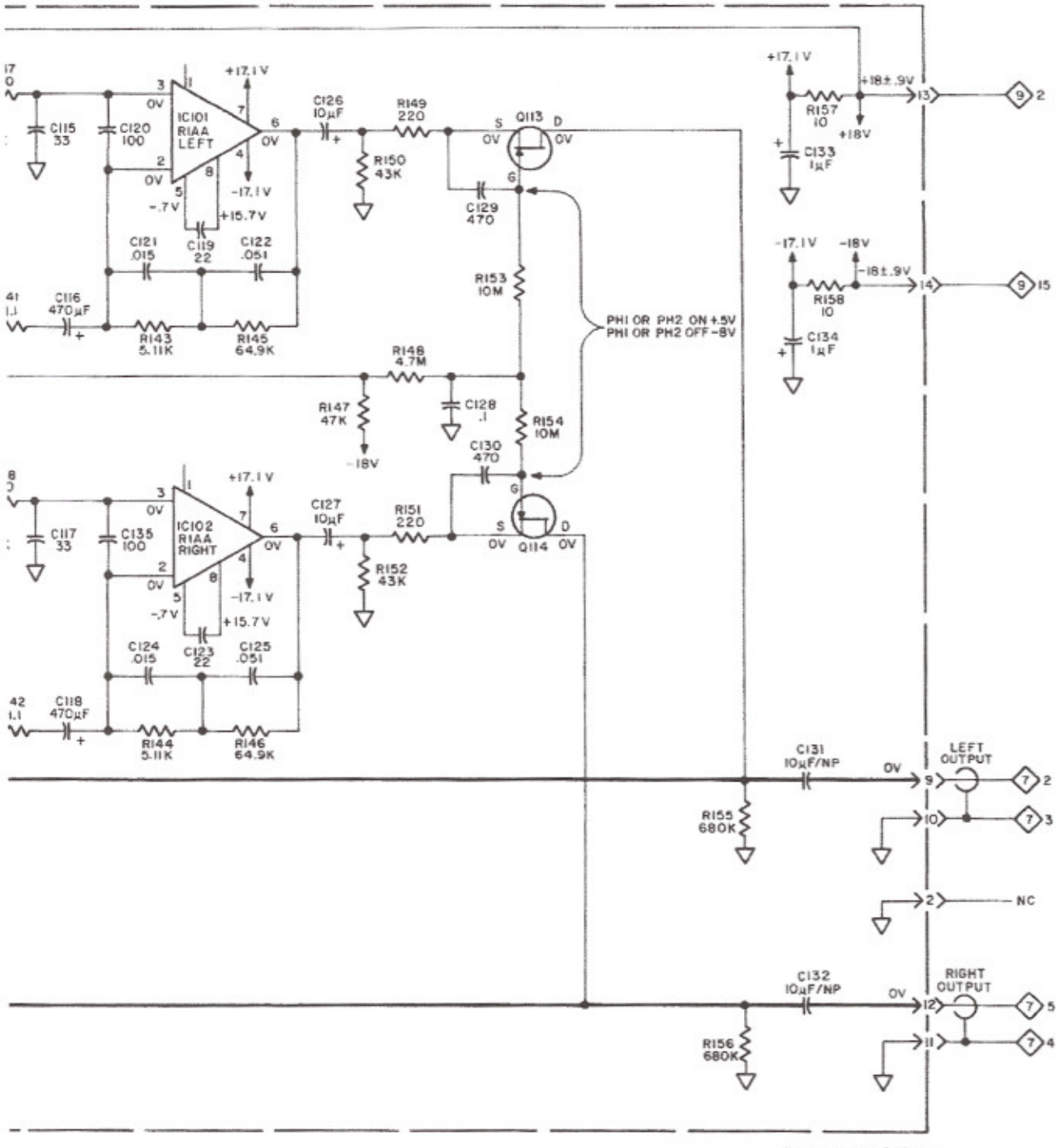

Schematic No. 156019A

Section 6 **PHONO PREAMP and INPUT SELECTION ASSEMBLY**

Part No. 039356

MX 117

AM / FM TUNER PREAMP

McIntosh

schematic information

SHEET 2 OF 2

The continuous improvement of its products is the policy of McIntosh Laboratory Incorporated, who reserve the right to improve design without notice. Because of the constant upgrading of McIntosh products' circuitry and components, the Company cannot insure, and does not warrant, the accuracy of the within schematic material, which is intended for information only.

McINTOSH LABORATORY INC. 2 CHAMBERS ST. BINGHAMTON, NY 13903

Printed in U.S.A.

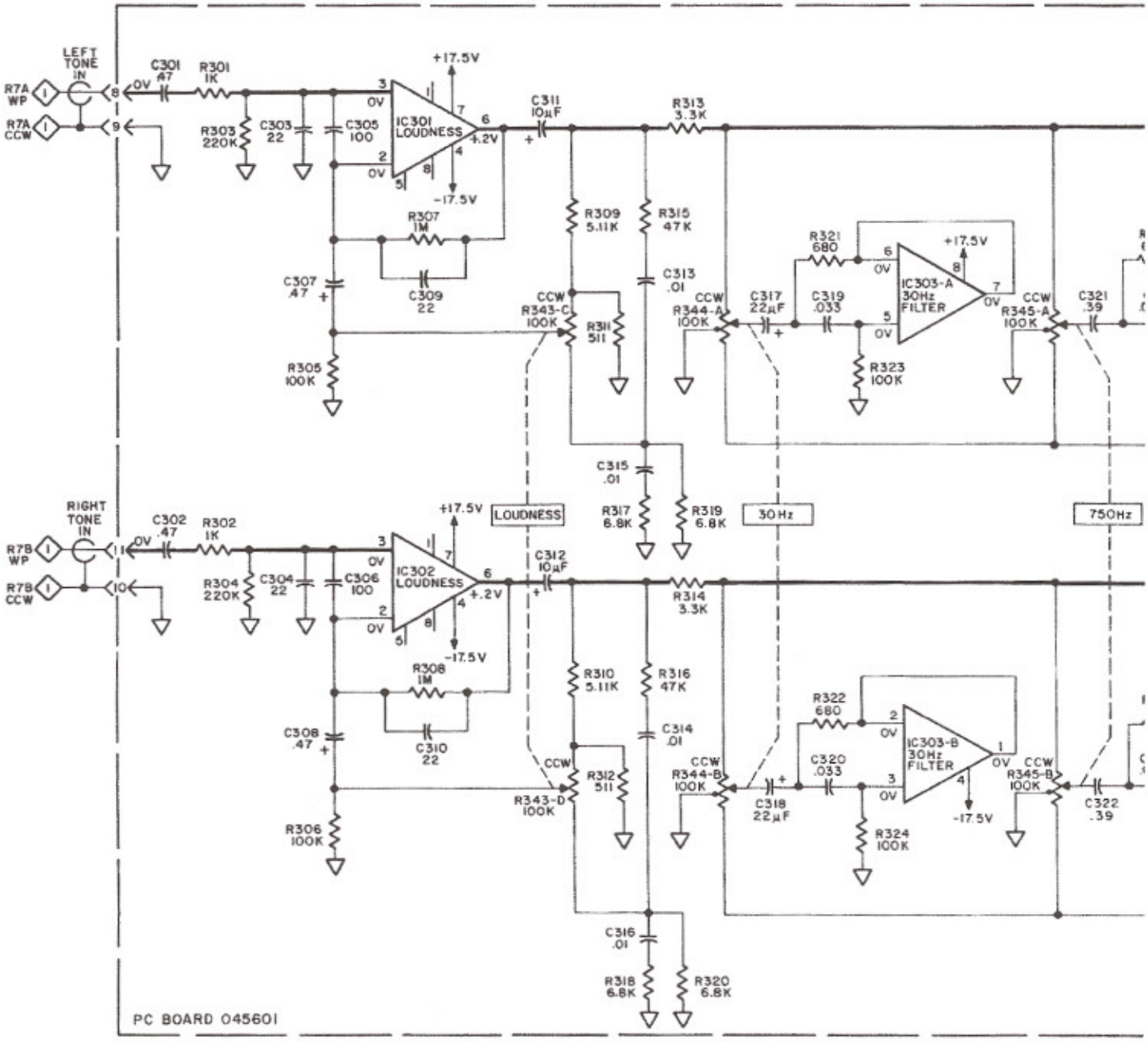

Section 8 EQUALIZER, LOUDNESS a

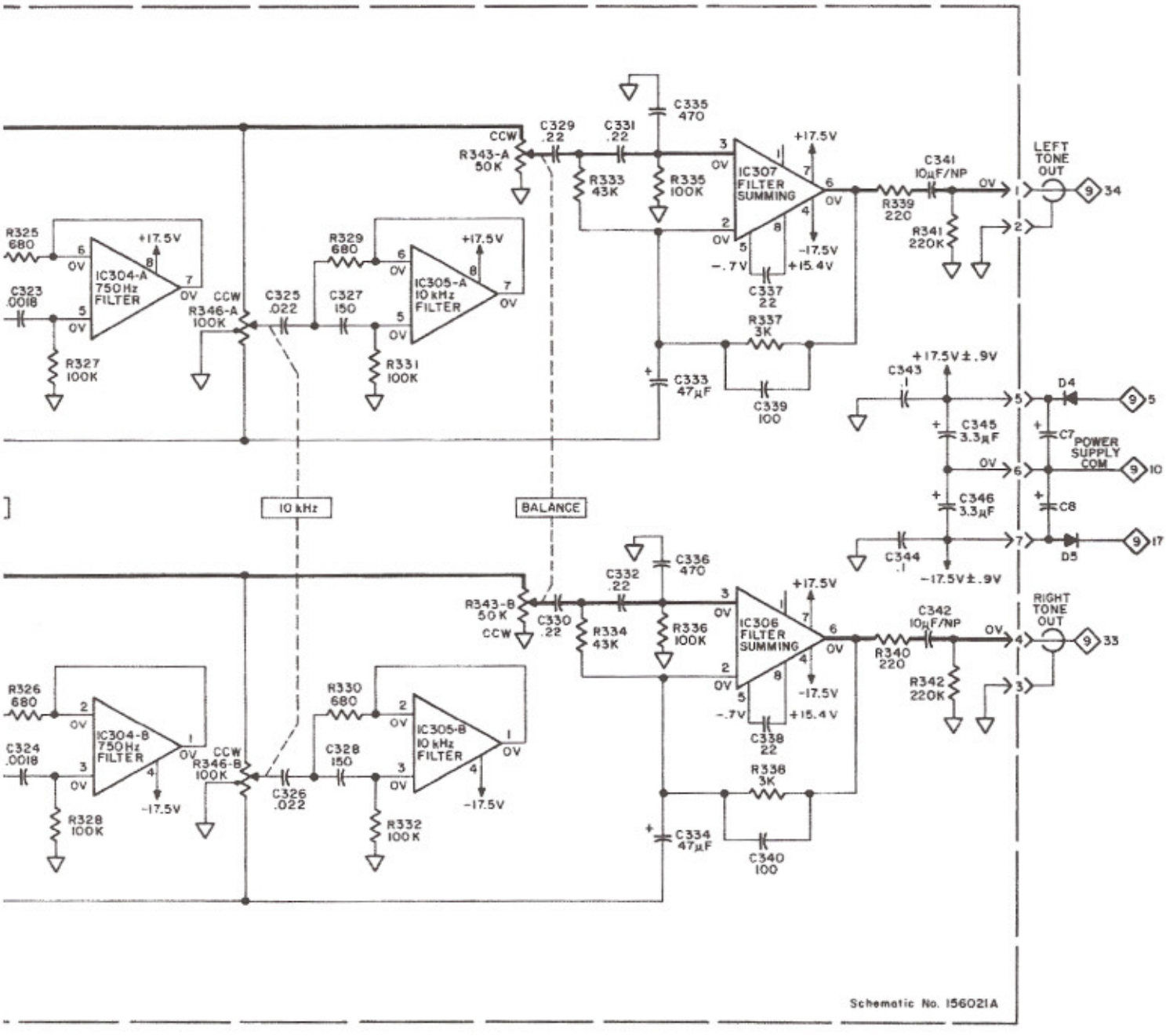
R325 680
C323 .0018
IC304-A 750Hz FILTER
R327 100K
+17.5V
CCW
R346-A 100K
C325 .022
R329 680
C327 150
IC305-A 10kHz FILTER
R331 100K
C329 .22
C331 .22
R343-A 50K
R333 43K
C335 470
R335 100K
IC307 FILTER SUMMING
-17.5V
-.7V
+15.4V
C337 22
R337 3K
C339 100
C333 47µF
C341 10µF/NP
R339 220
R341 220K
LEFT TONE OUT
34
C343 .1
+17.5V±.9V
D4
5
C345 3.3µF
C7
POWER SUPPLY COM
10
C346 3.3µF
C8
C344 .1
-17.5V±.9V
D5
17
10 kHz
BALANCE
R326 680
C324 .0018
IC304-B 750Hz FILTER
R328 100K
R346-B 100K
C326 .022
R330 680
C328 150
IC305-B 10kHz FILTER
R332 100K
R343-B 50K
C330 .22
C332 .22
R334 43K
C336 470
R336 100K
IC306 FILTER SUMMING
C338 22
R338 3K
C340 100
C334 47µF
C342 10µF/NP
R340 220
R342 220K
RIGHT TONE OUT
33
Schematic No. 156021A

nd BALANCE

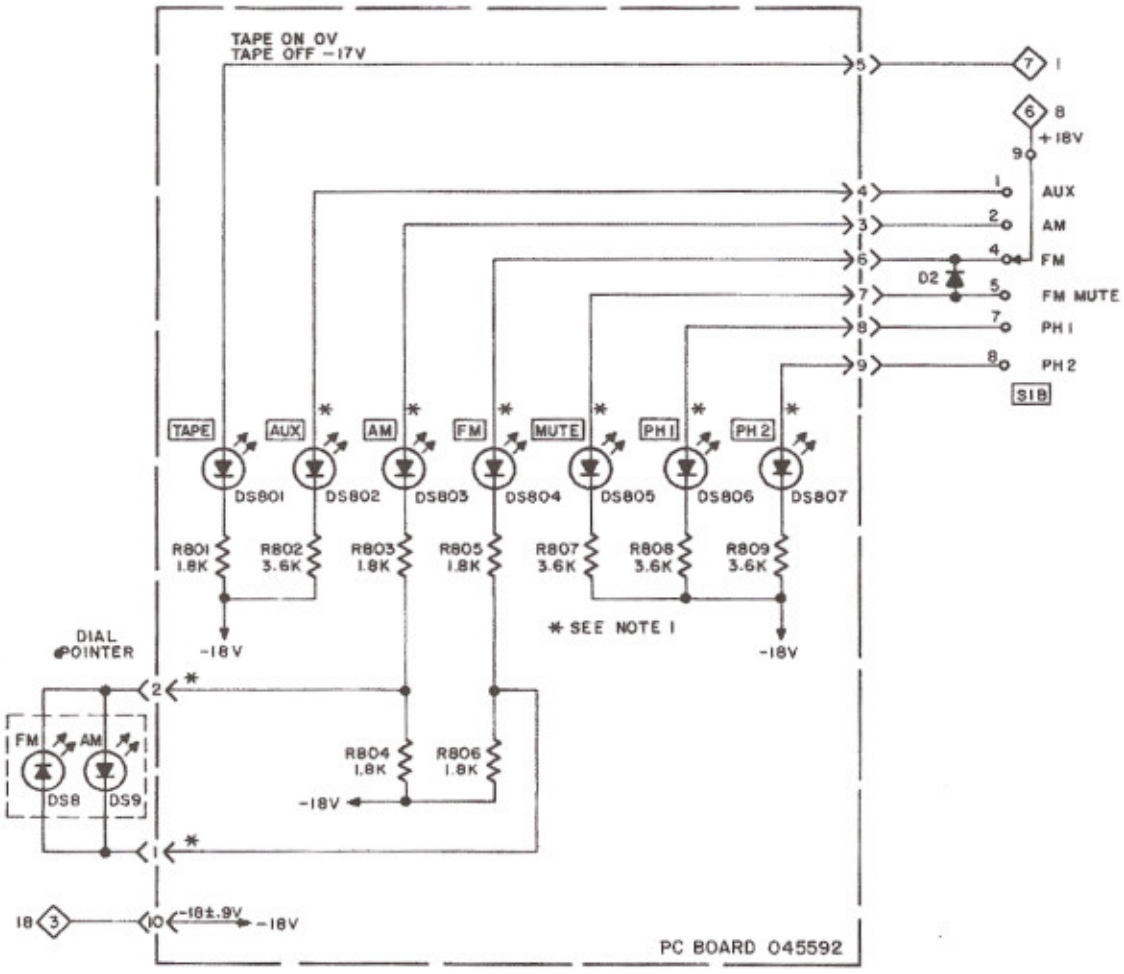

Schematic No. 156024A

Section 11 **DISPLAY FUNCTIONS**

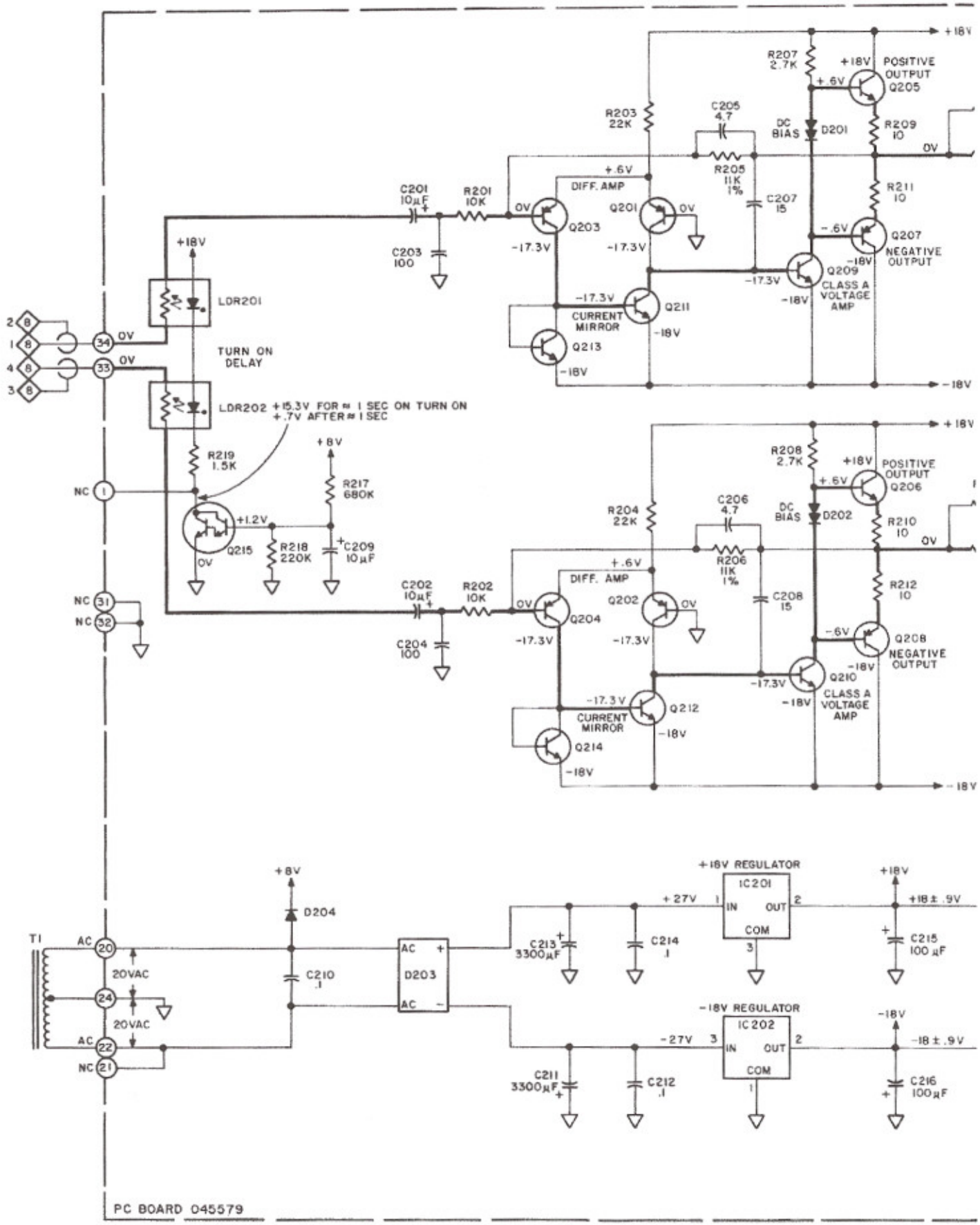

Section 9 **HEADPHONE AMPLIFIER, TURN-ON DELAY and POWER SUPPLY**

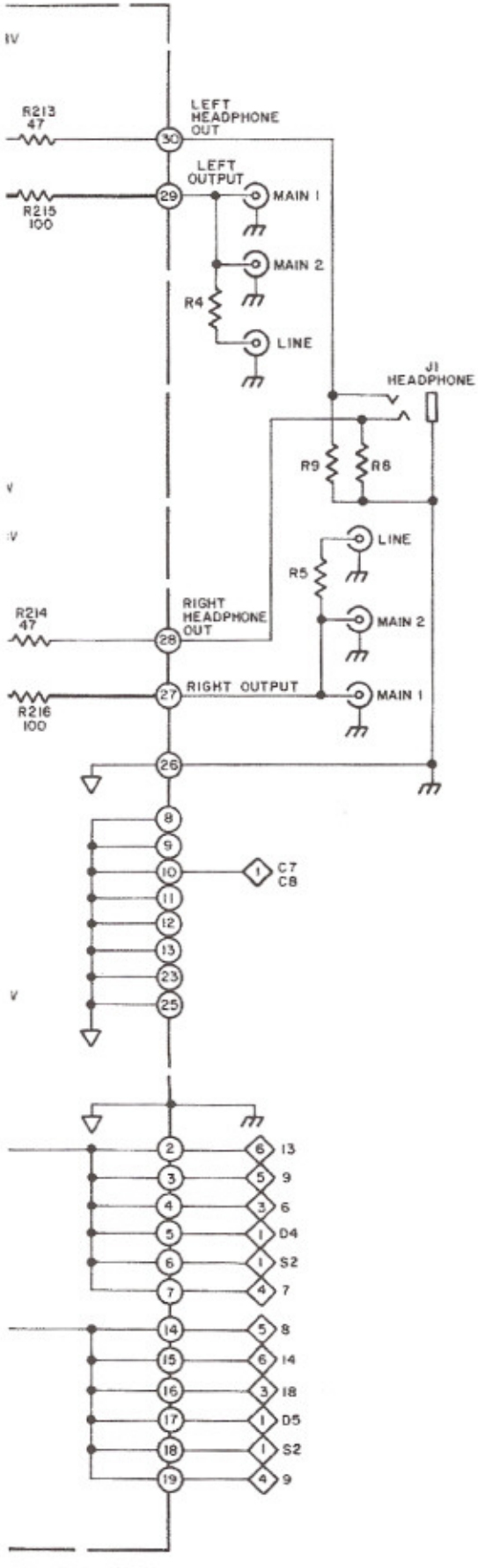

Schematic No. 156022A

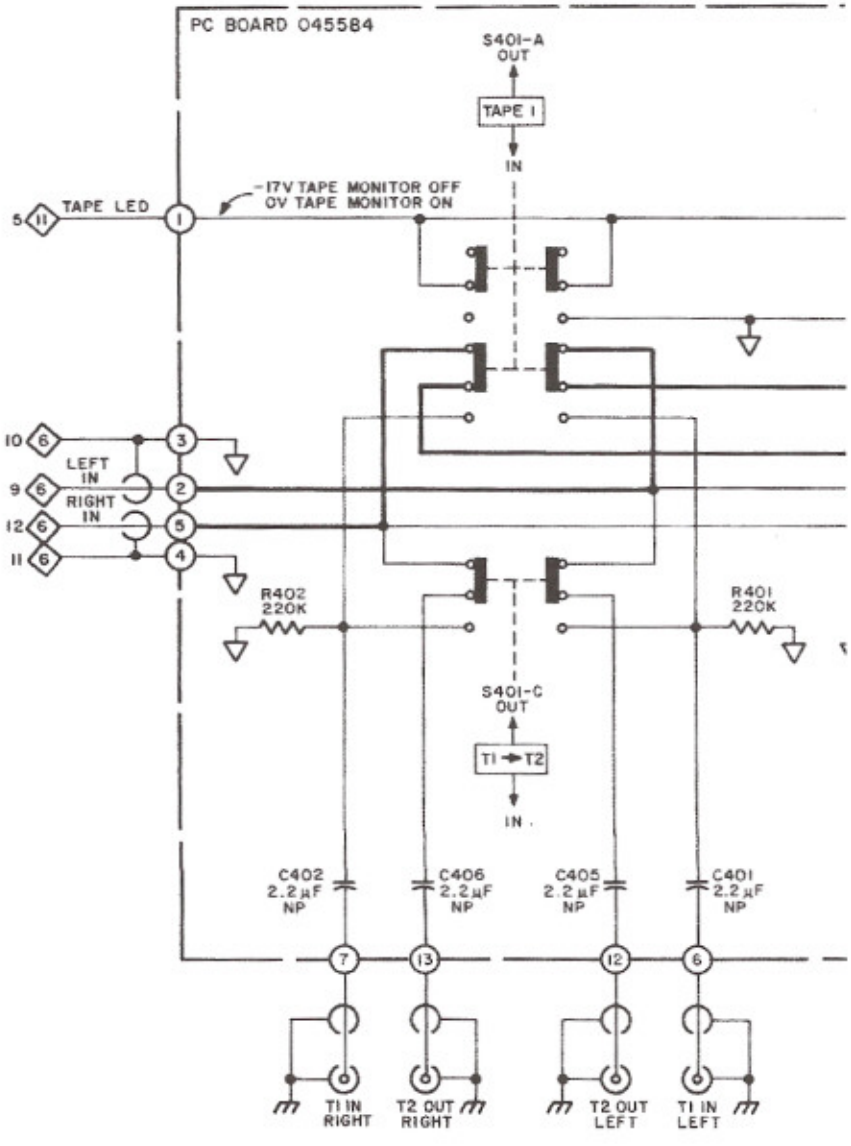

Section 7 TAPE, MODE and

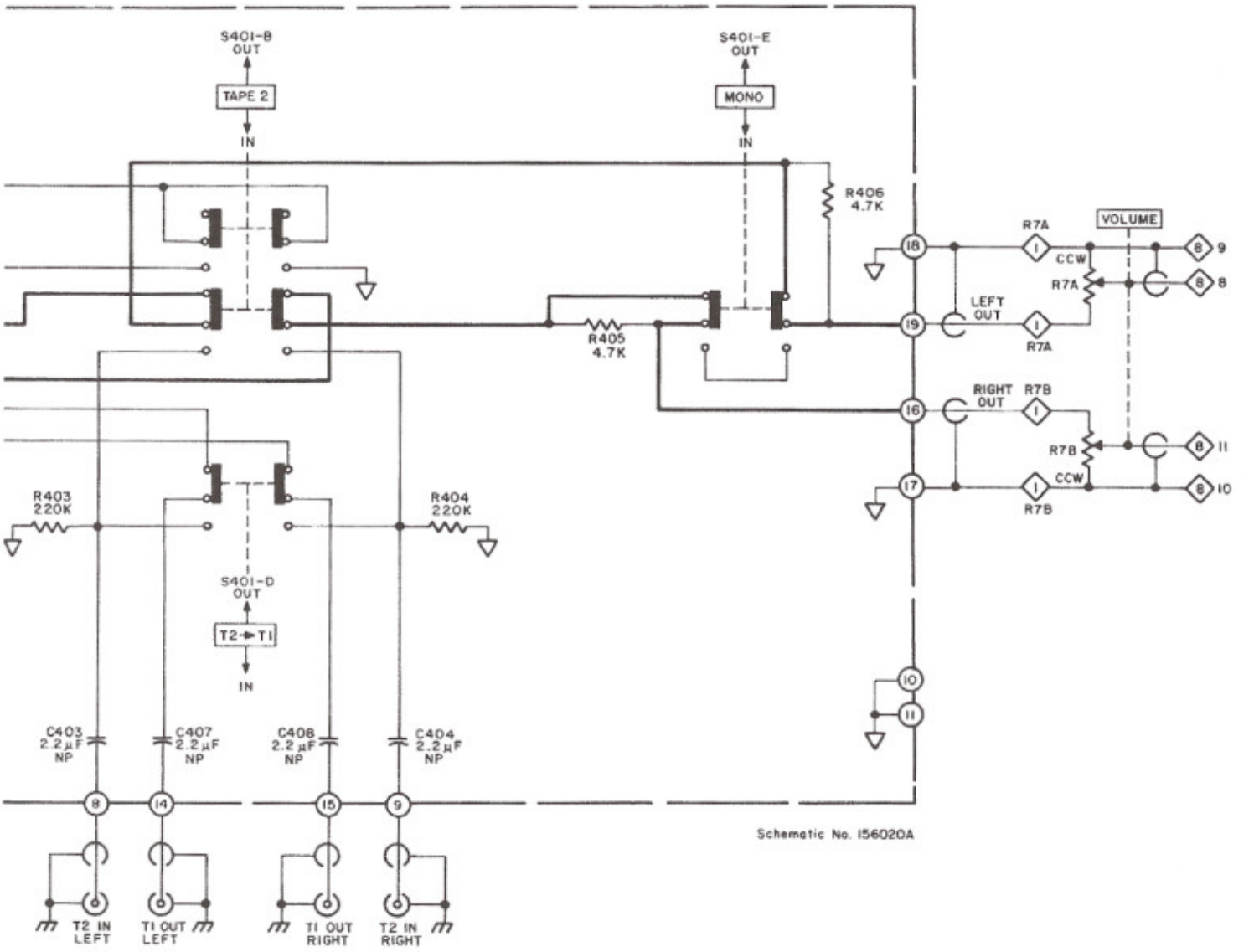

Schematic No. 156020A

POWER SWITCHES