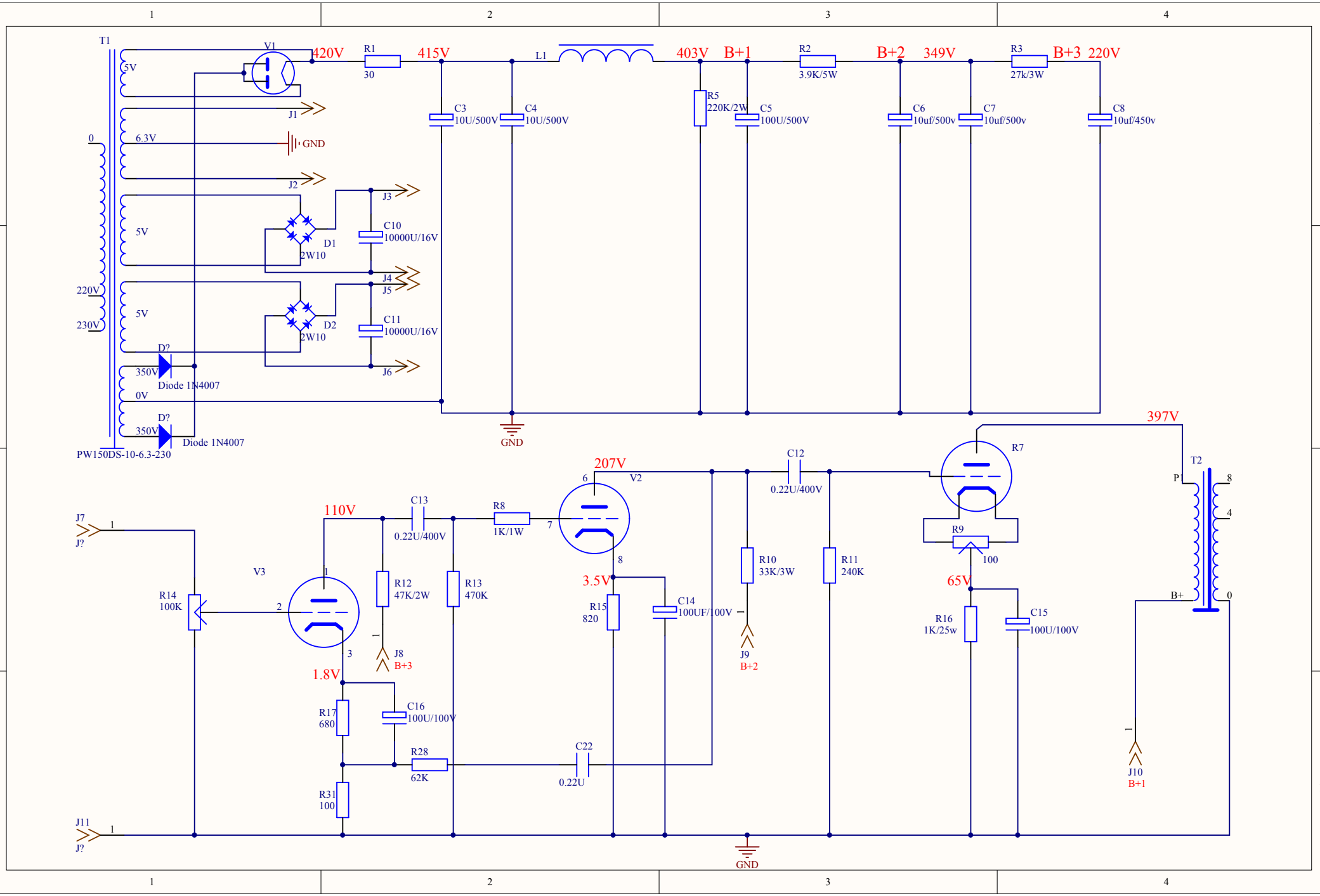
T1
V1
420V
R1
30
415V
L1
403V
B+1
R2
3.9K/5W
B+2
349V
R3
27k/3W
B+3
220V
5V
J1
C3
10U/500V
C4
10U/500V
R5
220K/2W
C5
100U/500V
C6
10uf/500v
C7
10uf/500v
C8
10uf/450v
0
6.3V
GND
J2
J3
5V
D1
2W10
C10
10000U/16V
J4
J5
220V
230V
5V
D2
2W10
C11
10000U/16V
D?
350V
Diode 1N4007
J6
0V
D?
350V
Diode 1N4007
PW150DS-10-6.3-230
GND
397V
R7
C12
0.22U/400V
207V
V2
T2
P1
8
4
0
B+
J7
J?
1
110V
C13
0.22U/400V
R8
1K/1W
7
6
8
R9
100
V3
R14
100K
2
1
R12
47K/2W
R13
470K
3.5V
R15
820
C14
100UF/100V
R10
33K/3W
R11
240K
65V
R16
1K/25w
C15
100U/100V
3
J8
B+3
J9
B+2
1.8V
R17
680
C16
100U/100V
R28
62K
C22
0.22U
R31
100
J10
B+1
J11
J?
1
GND