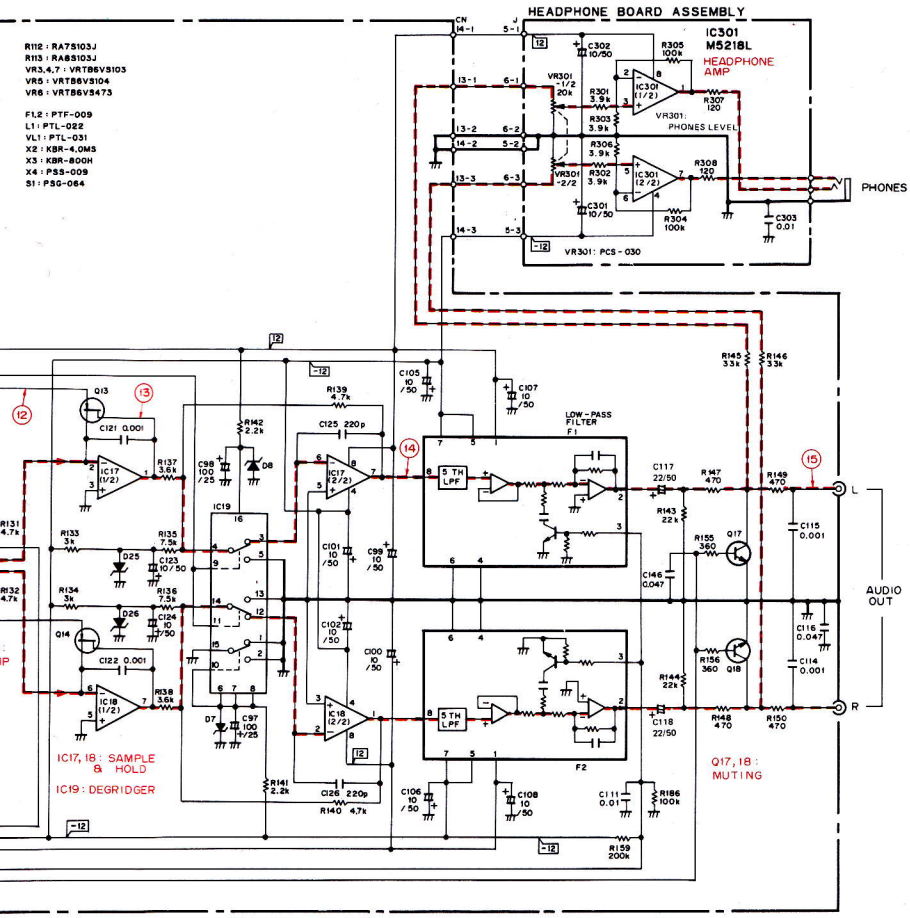


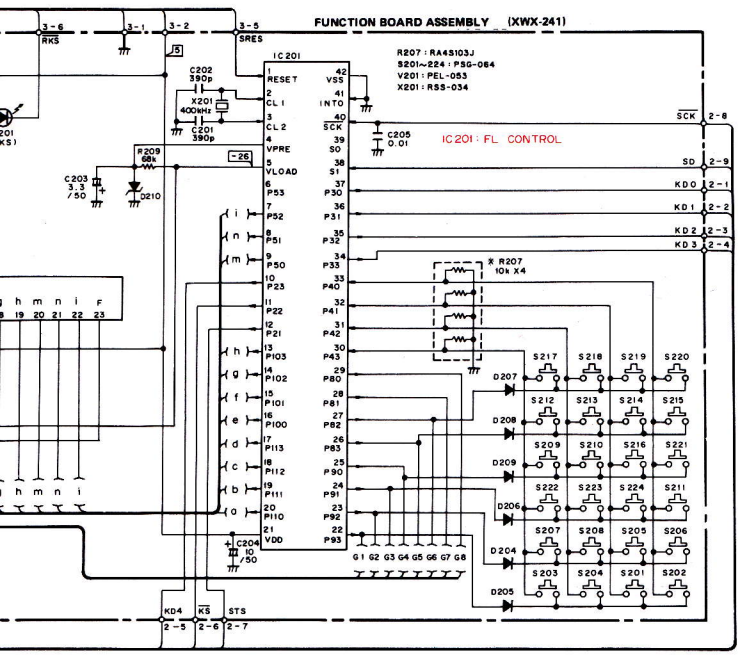


1. RESISTORS.
Indicated in Ω, ¼W, ⅙ W.±5% tolerance unless otherwise noted k; kΩ, M; MΩ, (F); ±1%, (G); ±2%, (K); ±10%, (M); ±20% tolerance

2. CAPACITORS:
Indicated in capacity (μF)/voltage (V) unless otherwise noted p; pF. Indication without voltage is 50V except electrolytic capacitor.

3. VOLTAGE CURRENT.
; DC voltage (V) at no input signal

4. OTHERS:
; Signal route.
; Adjusting point.
The ⚠ mark found on some component parts indicates the importance of the safety factor of the part. Therefore, when replacing, be sure to use parts of identical designation.
※ marked capacitors and resistors have parts numbers.

This is the basic schematic diagram, but the actual circuit may vary due to improvements in design.

The waveforms at each measuring point indicated by the encircled numbers are given on pages thru

SWITCHES:
MAIN BOARD ASSEMBLY
S1 : TEST
FUNCTION BOARD ASSEMBLY
S201 : OPEN / CLOSE
S202 : STOP / CLEAR
S203 : PAUSE
S204 : PLAY
S205 : TRACK SEARCH (⏮)
S206 : TRACK SEARCH (⏭)
S207 : MANUAL SEARCH (◀◀)
S208 : MANUAL SEARCH (▶▶)
S209 : INDEX SEARCH (⏮)
S210 : INDEX SEARCH (⏭)
S211 : PROGRAM MEMORY
S212 : 6
S213 : 7
S214 : 8
S215 : 9
S216 : 0
S217 : 1
S218 : 2
S219 : 3
S220 : 4
S221 : 5
S222 : TIME
S223 : EDITING
S224 : REPEAT
PRIMARY BOARD ASSEMBLY
S401 : POWER ON - OFF
OUTSIDE OF P.C. BOARD ASSEMBLY
S101 : INSIDE
S102 : CLAMP CLAMP - OPEN

The underlined indicates the switch position.

Focus servo loop line
Signal route
Tracking servo loop line
Carriage servo line
Loading motor route
Spindle motor route
Measurement point

A B C D